DS-2CD712PF-EPT DS-2CD732F-EPT

Key Features

- ±0.1 °Preset Accuracy
- 300 °/s Pan Preset Speed and 160 °/s Tilt Preset Speed
- 0.7-120 °/s Pan Manual Speed and 0.7-60 °/s Tilt Manual Speed
- Park Action: Start to Call Preset / Patrol / Pattern / Auto Scan / Random Scan / Frame Scan, after a Defined Time of Inactivity
- Programmable Limit Stops for Auto / Random Scan / Frame Scan Modes
- Alarm I/O: 1 Channel Input and 1 Channel Relay output
- Alarm Actions: 200 Presets, 8 Patrols, 4 Patterns, Auto Scan, Alarm Output, SD Memory Recording and Notification on PC Client
- Embedded Linux OS
- TI DaVinci Hardware Compression
- H.264 video Compression
- 1 Channel Audio Compression
- Support 4CIF / DCIF / 2CIF / CIF / QCIF Real Time Compression
- Support Dual Compression Stream
- Support Motion Detection, and Notification on PC Client
- Support both Variable Bit rate and Variable Frame Rate
- Support TCP/IP, HTTP, DHCP, DNS, RTP/RTCP, PPPoE, etc.
- Support IE for Network Preview
- Support HIKVISION Watermark
- Support Network Intercom Function
- Compatible with Current HIKVISION DVR/DVS SDK and Client Software
- Built-in Surge Protection
- Working Temperature -10℃ ~50℃ (Indoor)

©2006 – 2010 by HIKVISION. All rights reserved.

Specification

Parameter / Model	DS-2CD712PF-EPT	DS-2CD732F-EPT
Camera		
Image Sensor	1/3 inch SONY Super HAD CCD	1/4 inch CMOS
Effective Pixels	PAL: 752 (H) ×582 (V)	640 (H) ×480 (V)
Lens	3.5--9mm / F1.2 / Φ14 / Auto Iris	3.5--9mm / F1.2 / Φ14 / Manual Iris
Signal System	PAL	
Day & Night	Electronic	
Electronic Shutter	1/50s-1/100,000s	Auto
Min. Illumination	0.1Lux @ F1.2	0.4Lux @ F1.2
S/N Ratio	More than 48dB	
Video Output	480 TVL, 1Vp-p Composite Output (75Ω / BNC)	
BLC	ON	
Compression Standard		
Video Compression	H.264	
Video Output	32 K～2M, adjustable (8Mbps maximum)	
Audio Compression	OggVorbis	
Image		
Image Resolution	704x576, 640x480, 528x384, 704x288, 352x288, 176x144	
Frame Rate	25fps (704x576)	
Functions		
Horizontal Range	0～360°endless	
Vertical Range	0～90°	
Horizontal Speed	0.7～90°/S、0.7～120°/S, Programmable in Menu	
Vertical Speed	0.7～60°/S、0.7～90°/S, Programmable in Menu	
RS-485 Protocols	HIKVISION, Pelco-D, Pelco-P (addible), Self-adaptive	
Pan Preset Speed	160～300°/S, Programmable in Menu	
Auto Mode	Auto Scan, Frame Scan, Random Scan, 8 Patrol Scan, 4 Pattern Scan.	
Number of Presets	200	
Auto Flip	Support	
Menu Language	Chinese, English	
Mouse Control	Support Mouse Drag while select HIKVISION protocol in Client Software	
Dual Stream	Support	
SD card Local Recording	Support	
Heartbeat	Support	
Password Protect	Support	
Protocols	TCP/IP, HTTP, DHCP, DNS, RTP/RTCP, PPPoE (FTP, SMTP, NTP, SNMP addible).	

©2006 – 2010 by HIKVISION. All rights reserved.

Interface	
Audio Input	1 channel (2.0～2.4Vp-p, 1kΩ)
Audio Output	1 channel (Line level, 600Ω)
Communication	1 RJ45 10M/100M self-adapted Ethernet port and, 1 RS-485 interface
Alarm Input	1 channel signal input
Alarm Output	1 channel signal relay output
Others	
Working Temperature	-10℃~50℃ (Indoor)
Power Supply	12VDC, ±10%, (-E) series support PoE (Power over Ethernet)
Power Consumption	12W MAX
Dimensions (mm)	φ145 x 132.8
Weight	2000g

Dimension

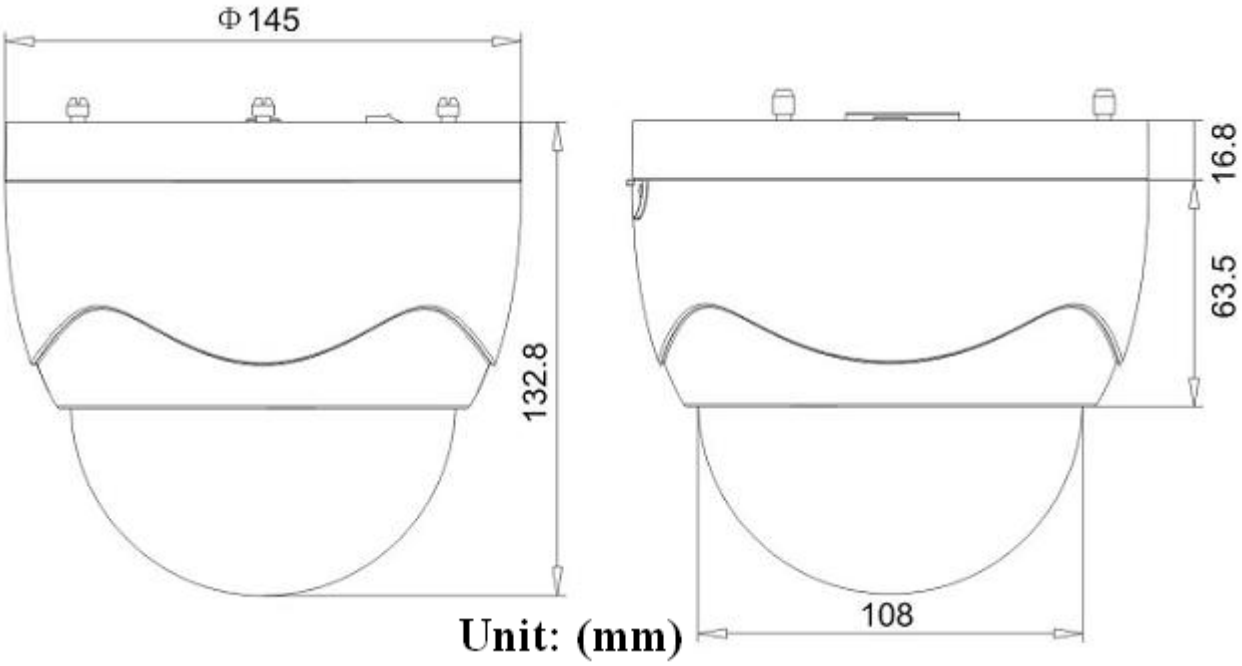

©2006 – 2010 by HIKVISION. All rights reserved.