GV-BX220D-0 / 220D-1 / 220D-2 / 220D-3 2MP H.264 D/N Box IP Camera

- 2 megapixel progressive scan CMOS
- Stream 1 from H.264 and MJPEG;
  Stream 2 from H.264, MPEG4 and MJPEG
- Up to 30 fps at 1920 x 1080
- Built-in / external microphone
- 2-way audio
- One sensor input and alarm output
- TV-out support
- Micro SD/SDHC Card Slot
- Motion detection
- Tampering alarm
- Privacy mask
- IP address filtering
- DC 12V / PoE
- Removable IR-cut filter for Day/Night function
- Varifocal megapixel lens
- Supports iPhone, iPad, Android & 3GPP
- 28 languages on Web interface

* No SD/SDHC card slot & local storage function for Argentina.

Models

Models	Auto Iris	Focal Length (mm)	Maximum Aperture	Image Format
GV-BX220D-0	DC Drive	2.8 ~8.5	F/1.4	1/3”
GV-BX220D-1		3.1 ~ 8	F/1.2	
GV-BX220D-2		2.8 ~ 6	F/1.3	
GV-BX220D-3		2.8 ~ 12	F/1.4	

Active Tampering Alarm

Tampered

Focus Change

Camera Shift

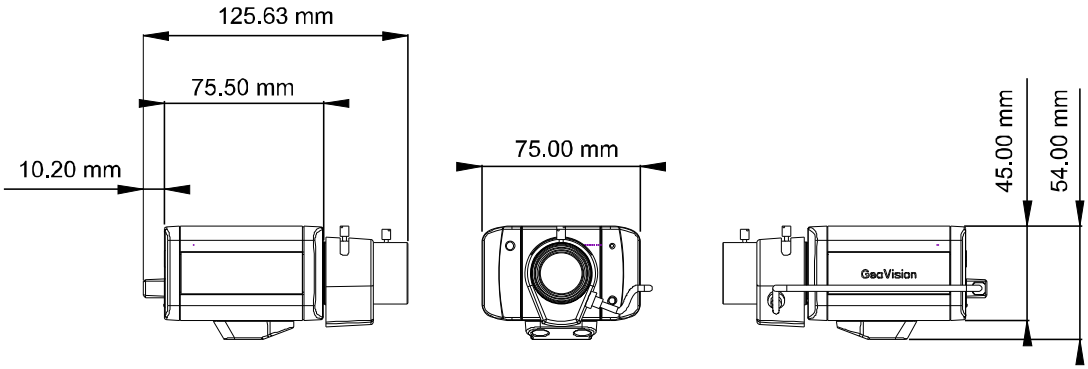

SPECIFICATIONS

		GV-BX220D-0	GV-BX220D-1	GV-BX220D-2	GV-BX220D-3
Camera					
Image Sensor		1/2.5" progressive scan CMOS			
Picture Elements		1920 (H) x 1080 (V)			
Minimum Illumination	Color	1 Lux (1/30 sec), 0.5 Lux (1/5 sec)			
	B/W	0.2 Lux (1/30 sec), 0.1 Lux (1/5 sec)			
	IR ON	0 Lux			
Shutter Speed		Automatic, Manual (1/5 ~ 1/8000 sec)			
White Balance		Automatic, Manual (2800K ~ 8500K)			

Lens					
Megapixel		Yes			
Day/Night		Yes (with removable IR-cut filter)			
Lens Type		Varifocal			
Focal Length		2.8 ~ 8.5 mm	3.1 ~ 8 mm	2.8 ~ 6 mm	2.8 ~ 12 mm
Maximum Aperture		F / 1.4	F / 1.2	F / 1.3	F / 1.4
Mount		CS Mount			
Image Format		1/3"			
Angle of View	Diagonal	94.45° ~ 32.47°			
	Horizontal	82.32° ~ 28.30°			
	Vertical	46.31° ~ 15.92°			
Operation	Focus	Manual (w / lock)			
	Zoom	Manual (w / lock)			
	Iris	DC			
Operation					
Video Compression		H.264, MPEG4, MJPEG			
Video Stream		Stream 1 from H.264 and MJPEG Stream 2 from H.264, MPEG4 and MJPEG			
Frame Rate		30 fps at 1920 x 1080 * The frame rate and the performance may vary depending on the number of connections and data bitrates (different scenes).			
Image Setting		Brightness, Contrast, Sharpness, Gamma, White Balance, Flicker-less, Image Orientation, Shutter Speed, D/N Sensitivity, Backlight Compensation			
Audio Compression		G.711, AAC (16 kHz / 16 bit) * AAC is only supported by GV-System V8.5 or later			
Sensor Input		1 Input (Dry Contact)			
Alarm Output		1 Digital Output (200mA 5V DC)			
Video Resolution					
Main Stream	4:3	1600 x 1200, 1280 x 960, 640 x 480, 320 x 240			
	16:9	1920 x 1080, 1280 x 720, 640 x 360, 448 x 252			
	5:4	1280 x 1024, 640 x 512, 320 x 256			
Sub Stream	4:3	640 x 480, 320 x 240			
	16:9	640 x 360, 448 x 252			
	5:4	640 x 512, 320 x 256			
Network					
Interface		10/100 Ethernet			
Ethernet Protocol		HTTP, HTTPS, TCP, UDP, SMTP, FTP, DHCP, NTP, UPnP, DynDNS, 3GPP/ISMA, RTSP, PSIA, SNMP, QoS (DSCP)			
Mechanical					
Lens Mounting		CS-Mount			
Connectors	Power	2-pin terminal block, PoE			
	Ethernet	RJ-45			
	Audio	1 In (Using the built-in microphone or externally connecting a microphone) 1 Out (Stereo phone jack, 3.5 mm / 0.14 in)			
	Digital I/O	3-pin terminal block, pitch 2.5 mm / 0.1 in			
	Auto Iris	DC drive			
	Local Storage	Micro SD/SDHC memory card slot (for Class 6 card or above)			
	TV-Out	BNC connector (640 x 480 resolution)			
LED Indicator		2 LEDs: Power, Status			
General					
Environment Temperature		0 °C ~ 50 °C / 32 °F ~ 122 °F			
Humidity		10% to 90% (no condensation)			
Power Source		12V DC / PoE			
Max. Power Consumption		7 W			
Regulatory		CE, FCC, C-Tick, RoHS compliant			
Dimension (L X W X H)		75.5 x 75 x 54 mm / 3.05 x 2.95 x 2.13 in (without lens)			
Weight		321 g / 0.71 lb			

Power over Ethernet	
PoE Standard	IEEE 802.3af Power over Ethernet / PSE
PoE Power Supply Type	End-Span
PoE Power Output	Per Port 48V DC, 350mA. Max. 15.4 watts
Web Interface	
Installation Management	Web-based configuration
Maintenance	Firmware upgrade through Web Browser or Utility
Access from Web Browser	Camera live view, video recording, change video quality, bandwidth control, image snapshot, digital I/O control, audio, Picture in Picture, Wide Angle Lens Dewarping,, Picture and Picture, Privacy Mask, Visual Automation, Tampering Alarm, Text Overlay
Language	Czech / Danish / English / French / German / Hebrew / Hungarian / Italian / Japanese / Polish / Portuguese / Russian / Serbian / Simplified Chinese / Spanish / Traditional Chinese * Bulgarian, Dutch, Greek, Indonesian, Lithuanian, Norwegian, Persian, Romanian, Slovakian, Slovenian, Thai and Turkish are only supported in V1.07 or later.
Applications	
Network Storage	GV-NVR, GV-System, GV-Backup Center, GV-Recording Server
Mobile Phone support	GV-AView for Android Smartphone, GV-Eye HD for iPad, GV-Eye for iPhone and iPod Touch, GV-GView for Windows PDA, GV-MSView for Windows Smartphone, GV-SSView for Symbian Smartphone, 3G-enabled phone.
Live Viewing	IE , GV-MultiView
CMS Server support	GV-Control Center, GV-Center V2, GV-VSM

Note: Specifications are subject to change without notice.