GV-BX520D 5MP H.264 D/N Box IP Camera

- 5 megapixel progressive scan CMOS
- Stream 1 from H.264 and MJPEG;
  Stream 2 from H.264, MPEG4 and MJPEG
- Up to 10 fps at 2560 x 1920
- Built-in / external microphone
- 2-way audio
- One sensor input and alarm output
- TV-out support
- Micro SD/SDHC Card Slot
- Motion detection
- Tampering alarm
- Privacy mask
- IP address filtering
- DC 12V / PoE
- Removable IR-cut filter for Day/Night function
- Varifocal megapixel lens
- Supports iPhone, iPad, Android & 3GPP
- 16 languages on Web interface

* No SD/SDHC card slot & local storage function for Argentina.

Active Tampering Alarm

Tampered

Focus Change

Camera Shift

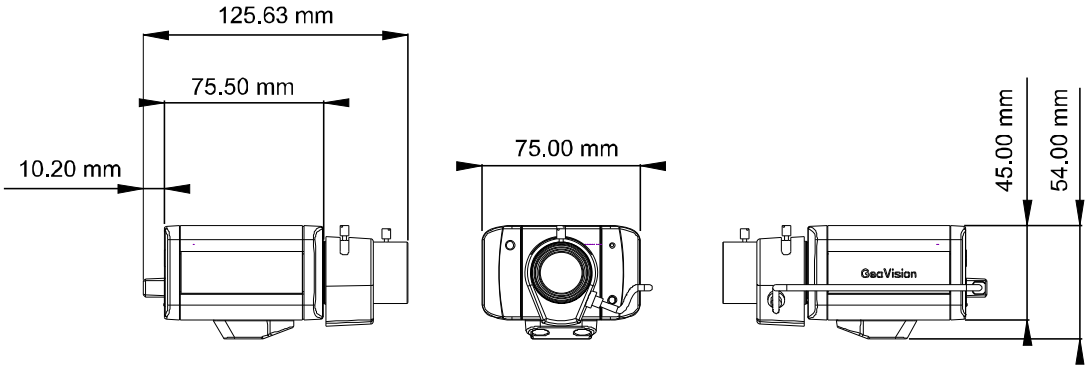

SPECIFICATIONS

Camera		
Image Sensor		1/2.5" progressive scan CMOS
Picture Elements		2560 (H) x 1920 (V)
Minimum Illumination	Color	0.5 Lux at F/1.6
	B/W	0.1 Lux at F/1.6
	IR ON	0 Lux
Shutter Speed		Automatic, Manual (1/5 ~ 1/8000 sec)
White Balance		Automatic, Manual (2800K ~ 8500K)
Lens		
Megapixel		Yes
Day/Night		Yes (with removable IR-cut filter)
Lens Type		Varifocal
Focal Length		4.5 ~ 10 mm
Maximum Aperture		F / 1.6
Mount		CS Mount
Image Format		1/2"

Angle of view	Diagonal	102° ~ 47°
	Horizontal	80.5° ~ 37.12°
	Vertical	60° ~ 28°
Operation	Focus	Manual (w / lock)
	Zoom	Manual (w / lock)
	Iris	Manual
Operation		
Video Compression		H.264, MPEG4, MJPEG
Video Stream		Streaming 1 from H.264 and MJPEG Streaming 2 from H.264, MPEG4 and MJPEG
Frame Rate		10 fps at 2560 x 1920 * The frame rate and the performance may vary depending on the number of connections and data bitrates (different scenes).
Image Setting		Brightness, Contrast, Sharpness, Gamma, White Balance, Flicker-less, Image Orientation, Shutter Speed, D/N Sensitivity, Backlight Compensation
Audio Compression		G.711, AAC (16 kHz / 16 bit) * AAC is only supported by GV-System V8.5 or later
Sensor Input		1 Input (Dry Contact)
Alarm Output		1 Digital Output
Video Resolution		
Main Stream	4:3	2560 x 1920, 2048 x 1536, 1600 x 1200, 1280 x 960, 640 x 480, 320 x 240
	16:9	1920 x 1080, 1280 x 720, 640 x 360, 448 x 252
	5:4	1280 x 1024, 640 x 512, 320 x 256
Sub Stream	4:3	640 x 480, 320 x 240
	16:9	640 x 360, 448 x 252
	5:4	640 x 512, 320 x 256
Network		
Interface		10/100 Ethernet
Ethernet Protocol		HTTP, HTTPS, TCP, UDP, SMTP, FTP, DHCP, NTP, UPnP, DynDNS, 3GPP/ISMA, RTSP, PSIA, SNMP, QoS (DSCP)
Mechanical		
Lens Mounting		CS-Mount
Connectors	Power	2-pin terminal block, PoE
	Ethernet	RJ-45
	Audio	1 In (Using the built-in microphone or externally connecting a microphone) 1 Out (Stereo phone jack, 3.5 mm / 0.14 in)
	Digital I/O	3-pin terminal block, pitch 2.5 mm / 0.1 in
	Auto Iris	DC drive (not workable for GV-BX520D with manual iris lens)
	Local Storage	Micro SD/SDHC memory card slot (for Class 6 card or above)
	TV-Out	BNC connector (640 x 480 resolution)
LED Indicator		2 LEDs: Power, Status
General		
Environment Temperature		0 °C ~ 50 °C / 32 °F ~ 122 °F
Humidity		10% to 90% (no condensation)
Power Source		12V DC / PoE
Max. Power Consumption		7 W
Regulatory		CE, FCC, C-Tick, RoHS compliant
Dimension (L X W X H)		75.5 x 75 x 54 mm / 3.05 x 2.95 x 2.13 in (without lens)
Weight		321 g / 0.71 lb
Power over Ethernet		
PoE Standard		IEEE 802.3af Power over Ethernet / PSE
PoE Power Supply Type		End-Span
PoE Power Output		Per Port 48V DC, 350mA. Max. 15.4 watts
Web Interface		
Installation Management		Web-based configuration
Maintenance		Firmware upgrade through Web Browser or Utility
Access from Web Browser		Camera live view, video recording, change video quality, bandwidth control, image snapshot, digital I/O control, audio, Picture in Picture, Wide Angle Lens Dewarping, Picture and Picture, Privacy Mask, Visual Automation, Tampering Alarm, Text Overlay
Language		Czech / Danish / English / French / German / Hebrew / Hungarian / Italian / Japanese / Polish / Portuguese / Russian / Serbian / Simplified Chinese / Spanish / Traditional Chinese

Applications	
Network Storage	GV-NVR, GV-System, GV-Backup Center, GV-Recording Server
Mobile Phone support	GV-AView for Android Smartphone, GV-Eye HD for iPad, GV-Eye for iPhone and iPod Touch, GV-GView for Windows PDA, GV-MSView for Windows Smartphone, GV-SSView for Symbian Smartphone, 3G-enabled phone.
Live Viewing	IE , GV-MultiView
CMS Server support	GV-Control Center, GV-Center V2, GV-VSM

Note: Specifications are subject to change without notice.